BLV-SDF20-5/3-25 型上车多路阀

BLV-SDF20-5/3-25 Multiple Directional Control Valve

技术参数 Technical Specifications

额定压力：25MPa；
P1口流量：80L/min　P2口流量：100L/min;
主起升阀合流流量：Q=180L/min;
多路阀中位压力损失：P≤0.8MPa;
多路阀滑阀操纵力：F≤430N.
可做成四联，卷扬联做成一联.
Rated Pressure: 25MPa
P1 Port Flow: 80L/min, P2 Port Flow: 100L/min
Main lifting valve flow : Q=180L/min;
Pressure loss at center position : P≤0.8MPa
Slide valve of multiple branch circuit valve operating force : F≤430N
Can make into four blocks,the winding block make into one

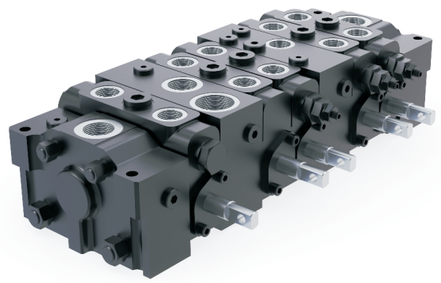

机能符号 Hydraulic Schematic

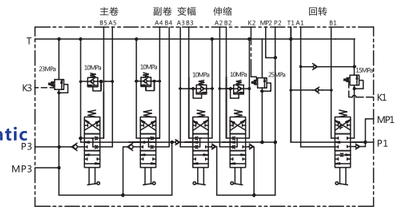

外形尺寸 Overall Dimension

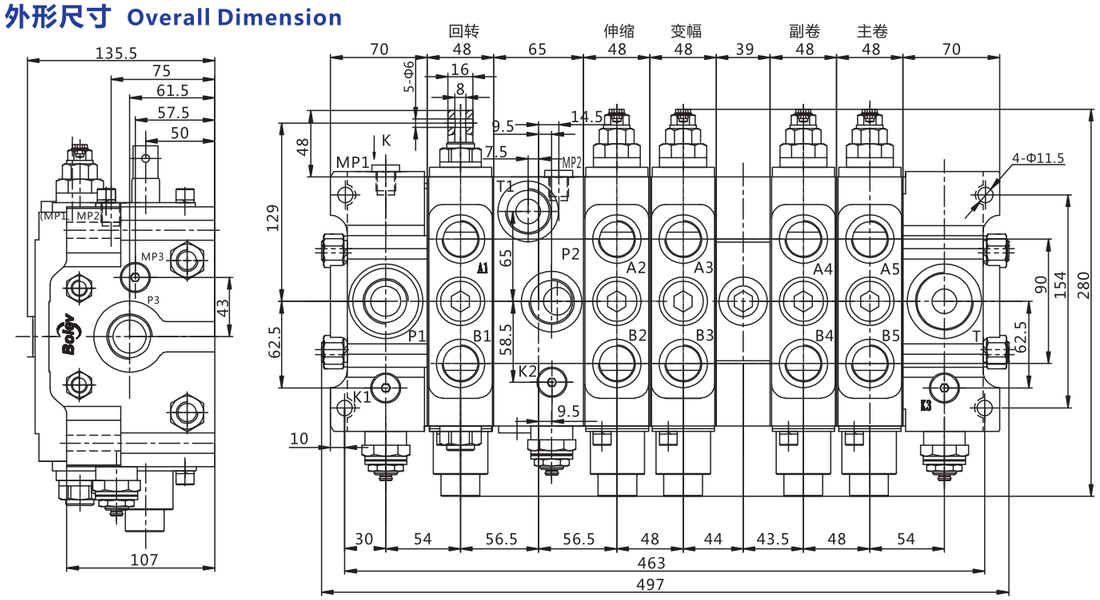

油口连接尺寸 Oil Port connection size

M24X2-6H: T
M33X2-6H: P1、P2、P3、T1
M27X2-6H: A1、B1、A2、B2、A3、B3、A4、B4、A5、B5
M14X1.5: K1、K2

BLV-SD-XDF16-*/1-31.5 整体式下车多路阀

BLV-SD-XDF16-*/1-31.5 Multiple Directional Control Valve For Crane Chassis

技术参数 Technical Specifications

额定压力：25MPa；
额定流量：60L/min;
适用介质：液压油;

Working Pressure : 25MPa ;
Rated Flow : 60L/min ;
Applicable Medium : Hydraulic Oil ;

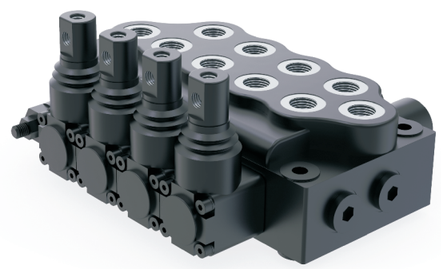

图形符号 Hydraulic Schematic

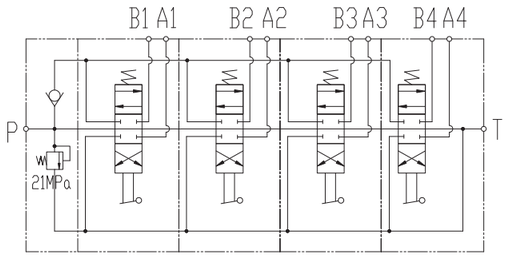

尺寸表		
型号Model	E (mm)	F (mm)
BLV-SD-XDF16-1/1-31.5	73	110.5
BLV-SD-XDF16-2/1-31.5	110	147.5
BLV-SD-XDF16-3/1-31.6	147	184.5
BLV-SD-XDF16-4/1-31.6	184	221.5
BLV-SD-XDF16-5/1-31.7	221	258.5
BLV-SD-XDF16-6/1-31.7	258	295.5

外形尺寸 Overall Dimension

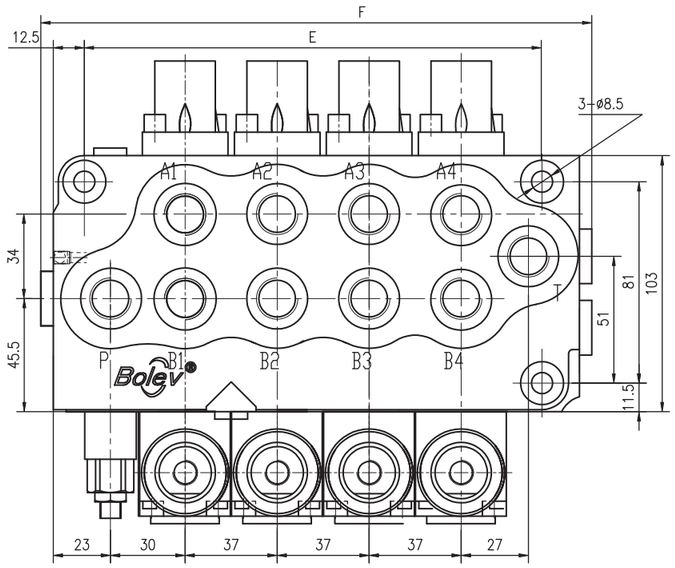

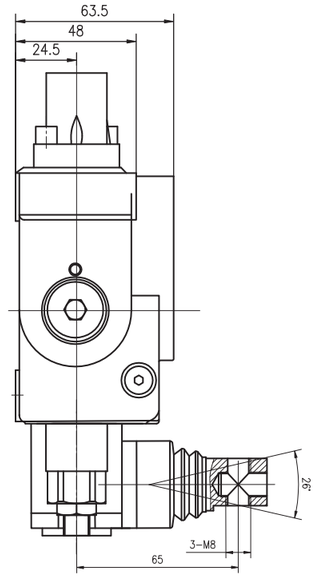

油口尺寸：G3/8：P、T、Ai、Bi